Watertown Supply

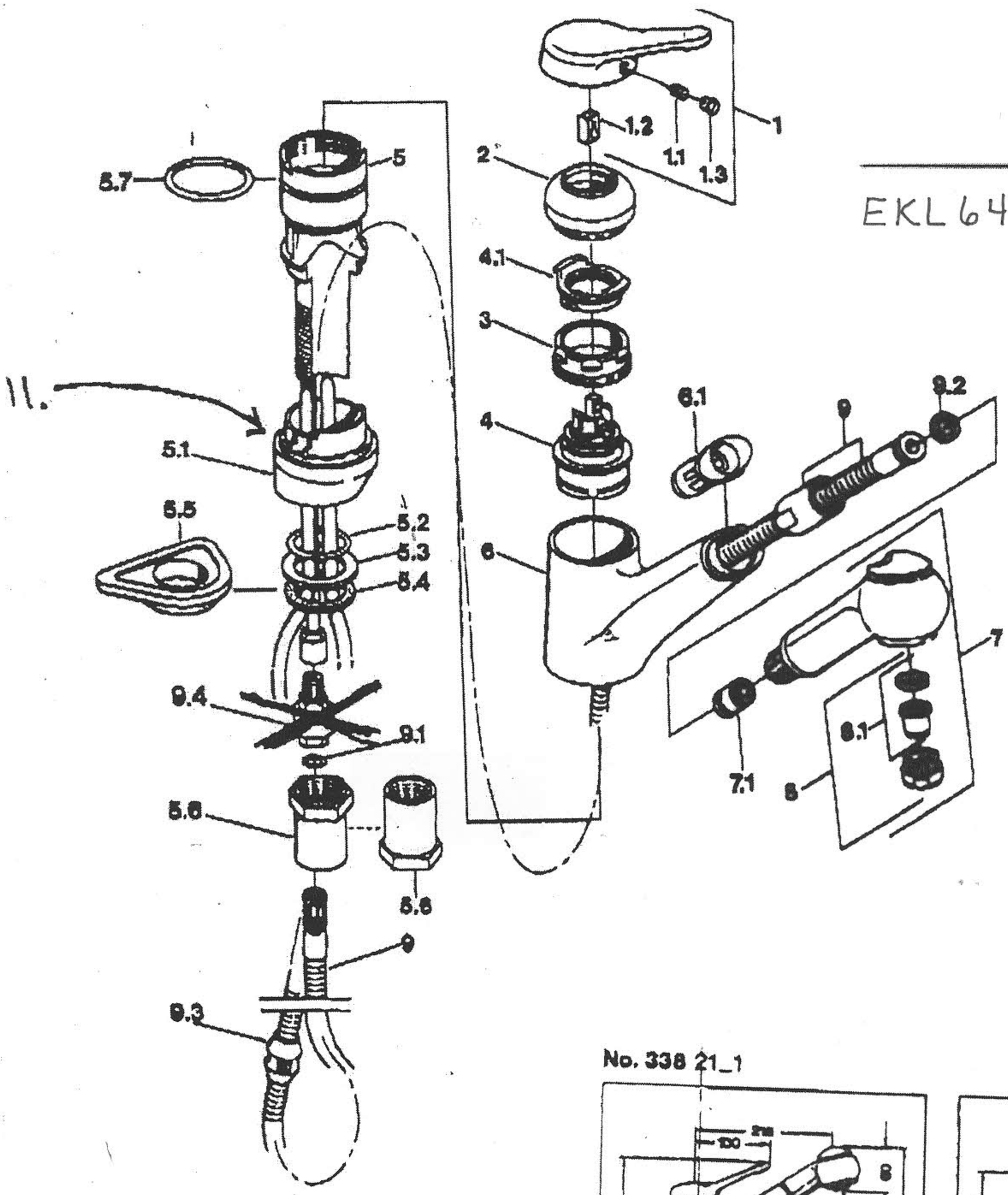

EKL 64825

No. 338 21_1

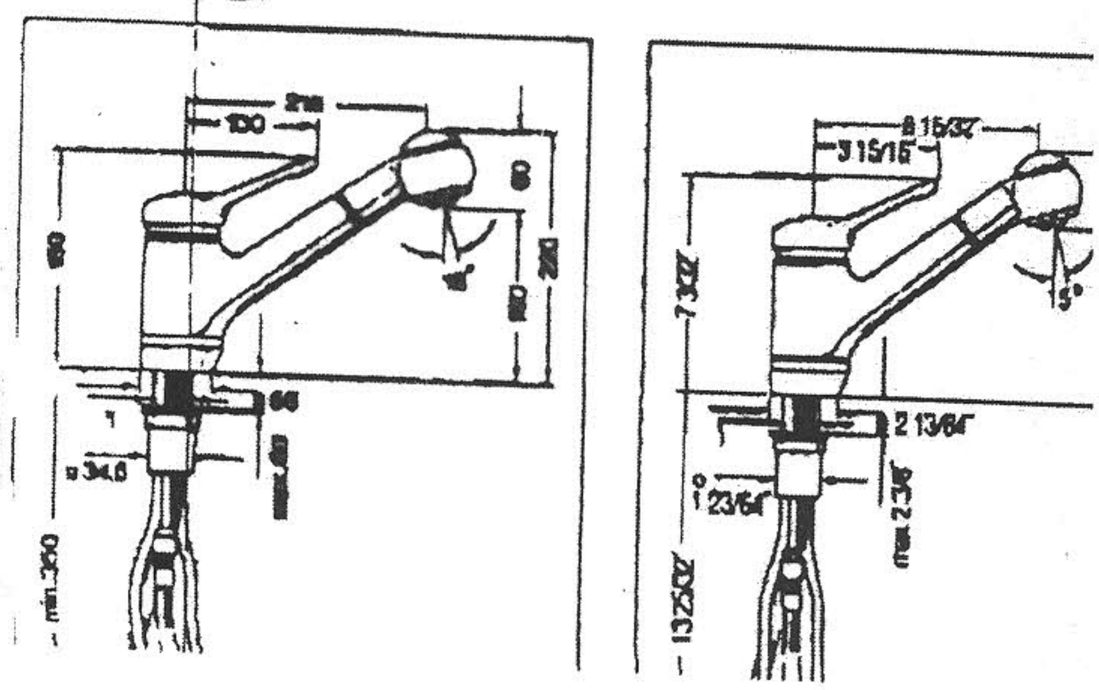

PHONE (617) 924-2840 · FAX (617) 924-0428 1-800-323-3233